470-860MHz TV Panel Arrays
PVP series

Product Description

The PVP broadband panel is designed as a building block for integration into complex antenna arrays or it can be used individually for simple antenna systems. The PVP panel covers the UHF band without field adjustment.

Features/Benefits

- Fully re-engineered for Digital TV
- Corrosion resistant aluminium construction with fibreglass radome
- Vertical polarization
- Low wind loading
- Cyclone rated
- Full band operation
- High power rating
- Array design allows a variety of horizontal radiation patterns with or without vertical beam tilt and null fill, contact RFS for details
- Temperature range -40 to +60^0 C available

Technical Features

Product Type	Band IV/V (UHF) TV Panel Arrays
Frequency Range, MHz	470 - 860
Polarization	Vertical
Number of Channels	Multichannel
Nominal Gain (Mid-band), dBd	11 - 13
Half Power Beamwidth Azimuth, degrees	60
Return Loss, dB	25
Input Connector	7-16 DIN; 7/8" EIA Flange
Power Rating, kW	2.5 Note # 1
Impedance, Ohms	50 unbalanced
Weight, kg (lb)	12 (26)
Mounting (Standard), mm (in)	4 x 12mm (1/2) bolts
Effective Area, sq m (sq ft)	Front 0.55 (5.92), Back 0.7 (7.5), Side 0.4 (4.3)
Design Wind Speed (max), km/h (mph)	240 (150)
Colour	White radome standard, other upon request
Pressurization - Operational, kPa (psi)	20 - 35 (3 - 5) 7/8" EIA Version
Pressurization - Test, kPa (psi)	100 (15) 7/8" EIA Version
Material - Radome	Fibreglass
Material - Insulators	PTFE
Material - Radiators	Corrosion resistant aluminium
Material - Reflecting Screen	Corrosion resistant aluminium

Note 1 Power rating is limited by input connector - 5kW version available with dual 7/8" EIA inputs.

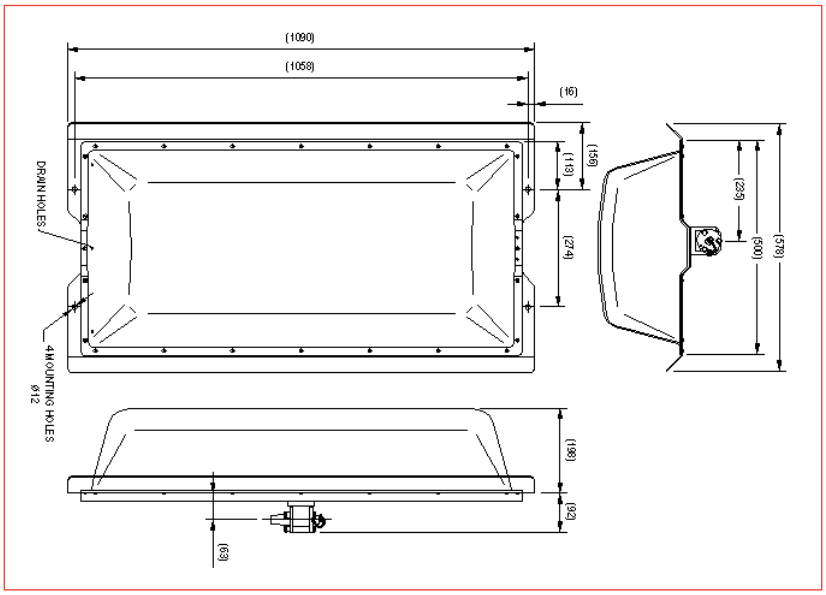

All information contained in the present brochure is subject to confirmation at time of ordering